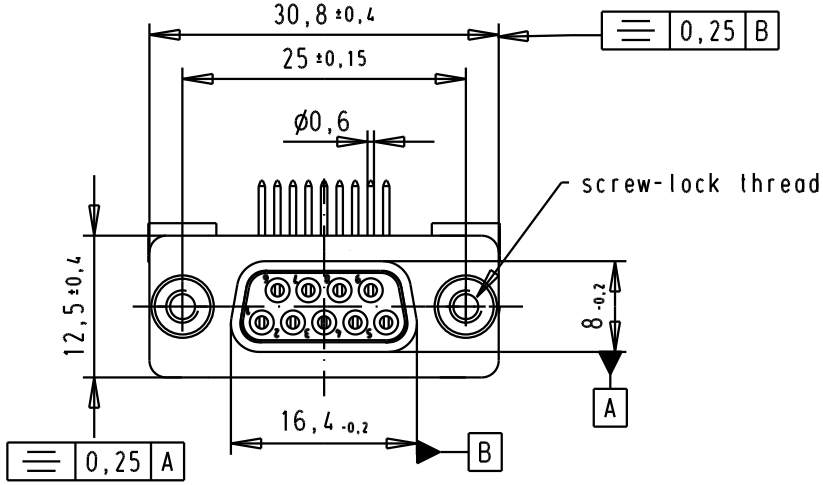

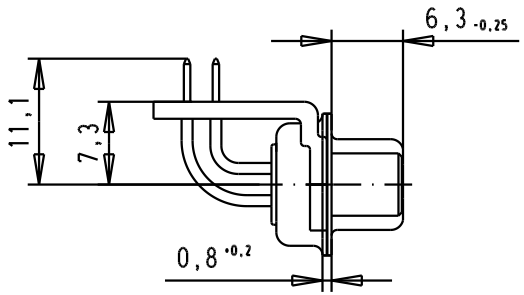

SPECIFICATION

Mating Cycles	500
Filter type	C
Capacitance	47pf ±20%
Working Voltage	100v
Current Rating	7,5A
Insulation Resistance	>1GΩ

FREQUENCY (MHz)	ATTENUATION dB
5	-
10	-
50	-
100	-
500	30dB
1000	35dB

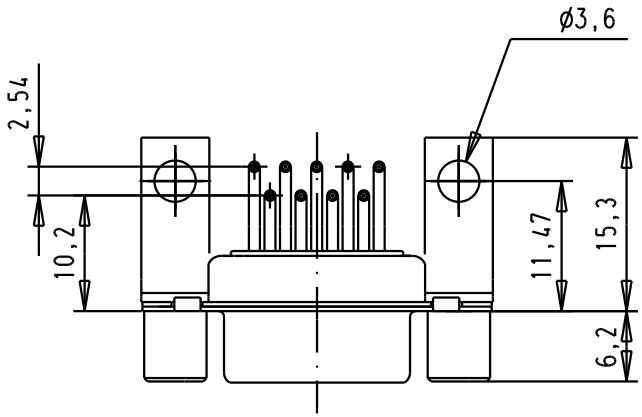

PCB Layout, Component side

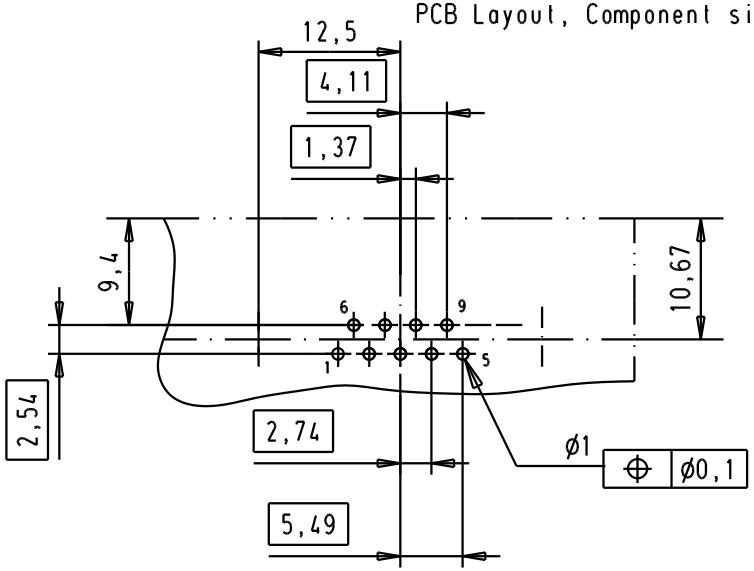

							Dat.	Name	All Dim. in mm Orig. Size DIN A 4	D-Sub, female, angled, 9 Poles, solder pins, tin plated shell with brackets, screw-locks and holes	Maßstab/ Scale 1.5:1
						Detail.	8-JUL-02	CV			
						Insp.					
						Stand.					
09641147219	M3		33231	07/10/05	JMDR	HARTING EURL F-95972 Paris				TB 0964114721x	Blatt/ Page 4/4
09641147218	UNC 4-40		31058	8-JUL-02	CV						
Part number	screw-lock thread		Mod.	Dat.	Name					Sub.	