DRAWING MADE IN THIRD ANGLE PROJECTION

/home/us016926/DMTECmod

PART NUMBER	REV	FIRST USED
680449-1	E	122500-1
680449-2	E	565435-5
680449-3	E	354500-1

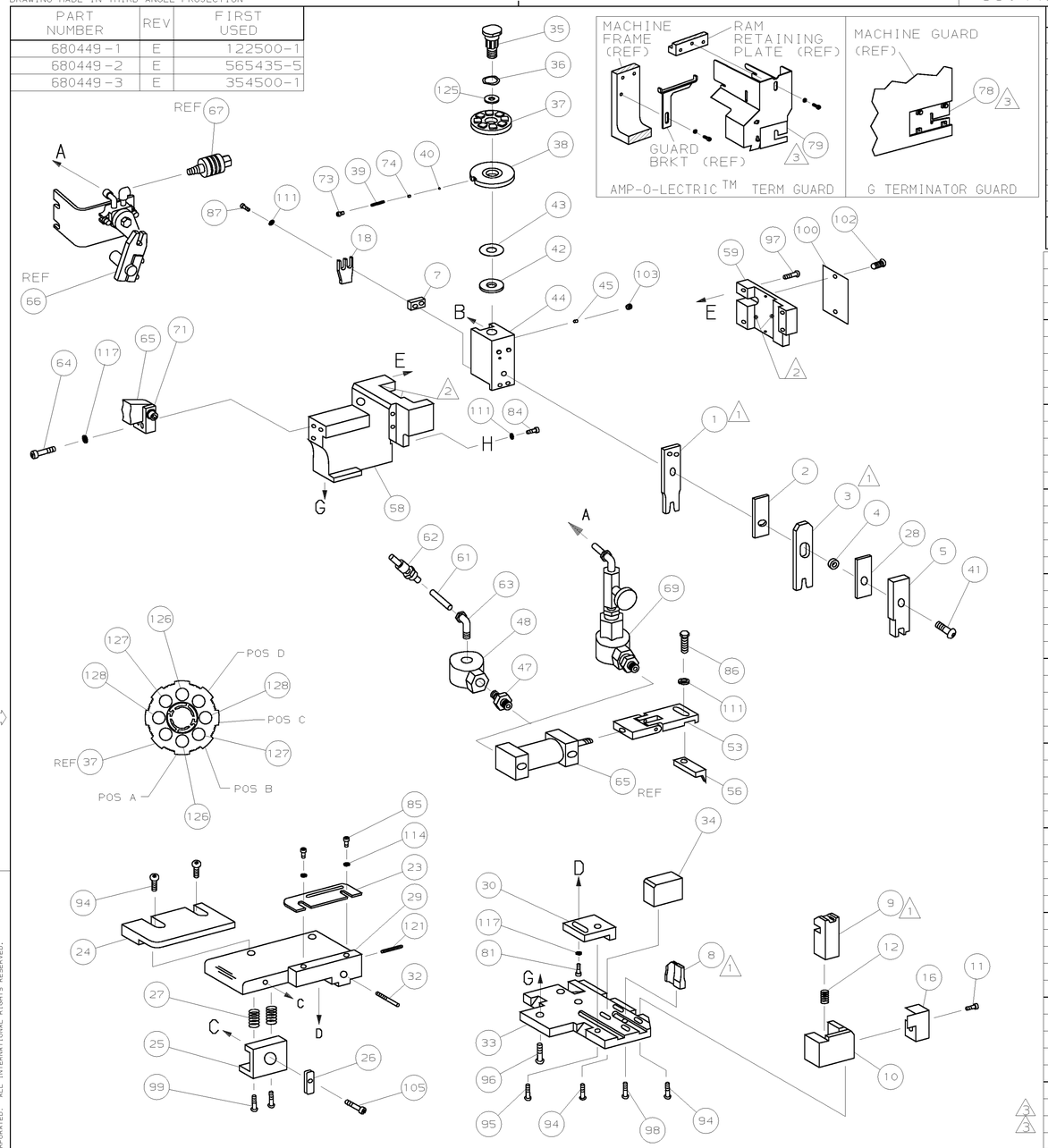

TERMINAL NAME: CONTACT POWER CONN

788110

CRIMPING DATA

PAD LTR	CRIMP HEIGHT	WIRE SIZE
A	.129 ±.002 [3.28 ±0.05mm]	10
B	.115 ±.002 [2.92 ±0.05mm]	12
C	.095 ±.002 [2.41 ±0.05mm]	14
D	NOT	USED

CRIMP	SIZE	TYPE	RANGE
WIRE	.180 [4.57mm]	F	14-10
INSUL	.210 [5.33mm]	F	.146-.169

WIRE STRIP LENGTH	TERM APPL SPEC	FEED	APPL INSTRUCTION	SET UP GAGE	LAYOUT
.266-.297	114-6034	.730	408-8040	458637-1	L1911

-1	LEADMAKER	AIRFEED
-2	BENCH MODEL K	AIRFEED
-3	BENCH MODEL G	AIRFEED

-3	-2	-1	U/M	DWG SIZE	PART NO	DESCRIPTION	ITEM NO
							129
2	2	2	-	C	9-354778-1	PIN, WIRE DISC (.2950)C	128
2	2	2	-	C	5-354778-1	PIN, WIRE DISC (.2750)B	127
2	2	2	-	C	2-354778-1	PIN, WIRE DISC (.2600)A	126
1	1	1	-	A	986950-1	WASHER, FLAT PRECISION	125
1	1	1	-	A	217238-1	GENERAL INSTRUCTION PACKAGE	124
1	1	1	-	-	4088040	SF APPL INST 408-8040	123
							122
1	1	1	-	A	4-21028-0	PIN,SLT SPR(ø.093x.75)ST GDE PL	121
							120
							119
							118
3	3	3	-	A	21024-5	WASHER, LOCK(#10)ADJ BLOCK	117
							116
							115
2	2	2	-	A	21024-2	WASHER,LOCK(#4)FRONT STP GUIDE	114
							113
							112
4	4	4	-	A	21024-4	WASHER,LOCK(#8)STRIPPER	111
							110
							109
1	1	1	-	A	21018-5	NUT,HEX(NO.6)HOLDDOWN	108
							107
							106
1	1	1	-	A	22353-8	SCR,SHLD(ø.187x.25)DRAG LEVER	105
1	1	-	-	A	992031-1	PIN, CLEVIS	104
1	1	1	-	A	21009-2	SCR,SKT SET(1/4-20x.25 LW)RAM	103
2	2	2	-	A	21017-2	SCR,DRIVE(#2x.19)ID PLATE	102
							101
1	1	1	-	B	461264-1	PLATE, IDENTIFICATION	100
2	2	2	-	A	3-21002-0	SCR,BHC(10-32x.88)DRAG	99
1	1	1	-	A	22733-8	SCR,BHC(8-32x.38 LW)ANVIL	98
4	4	4	-	A	2-21002-9	SCR,BHC(10-32x.75)CAP	97
3	3	3	-	A	2-22733-8	SCR,BHC(1/4-20x.62)HSG	96
1	1	1	-	A	2-21002-7	SCR,BHC(10-32x.50)SG ADJ BLK	95
6	6	6	-	A	2-21002-2	SCR,BHC(8-32x.50)TERM H DWN	94
							93
							92
							91
							90
1	1	-	-	A	7-21000-9	SCR,SHC(4-40x.19)STRIPPER	89
							88
2	2	2	-	A	2-21000-7	SCR,SHC(8-32x.46)DEP-HOLD	87
1	1	1	-	A	2-22603-1	SCR,HEX HD(8-32x.38)FEED FINGER	86
2	2	2	-	A	1-21000-3	SCR,SHC(4-40x.25)F ST GUIDE	85
1	1	1	-	A	2-21000-7	SCR,SHC(8-32x.50)STRIPPER	84
							83
							82
1	1	1	-	A	3-21000-4	SCR,SHC(10-32x.38)SG ADJ BL	81
							80
-	1	-	-	B	462992-7	GUARD ASSY	79
REF	-	-	-	B	679532-1	INSERT, GUARD	78
							77
							76
							75
1	1	1	-	A	690603-1	SPRING, ASSIST	74
1	1	1	-	A	23030-1	SCR,SHC(6-32x.25 SL)INS DISC	73
							72
1	1	1	-	B	459610-3	MOUNT, FEED BRACKET	71

QTY REQD PER ASSY — PARTS LIST

-3	-2	-1	U/M	DWG SIZE	PART NO	DESCRIPTION	ITEM NO
							70
-	1	-	-	C	692655-5	AIR FEED VALVE ASSY	69
							68
-	REF	-	-	A	24042-2	VALVE, SHUT OFF	67
-	REF	-	-	C	692655-6	AIR FEED VALVE ASSY	66
1	1	1	-	B	461065-1	AIR FEED ASSY (1 INCH)	65
2	2	2	-	A	3-21000-8	SCR,SHC(10-32x.88)AIR ASSY	64
1	-	1	-	A	983427-6	ELBOW, SWIVEL 1/8 NPT - 1/4 T	63
1	-	1	-	A	23238-1	QUICK DISCONNECT	62
21.00	-	21.00	IN	A	27319-4	TUBING, POLY-FLO ø.25	61
							60
1	1	1	-	C	454220-1	CAP, RAM	59
1	1	1	-	D	454485-1	HOUSING	58
							57
1	1	1	-	B	458537-2	PAWL, FEED	56
							55
							54
1	1	1	-	B	461062-1	FEED FINGER ASSY	53
							52
							51
							50
							49
1	-	1	-	A	22374-7	VALVE, QUICK EXHAUST	48
1	-	1	-	A	22304-1	NIPPLE, HEX 1/8 NPT	47
							46
1	1	1	-	A	690191-1	PLUG, NYLON	45
1	1	1	-	C	455673-1	RAM	44
1	1	1	-	A	690125-1	WASHER, LAMINATED	43
1	1	1	-	A	1-690124-0	WASHER, RAM	42
1	1	1	-	A	7-21002-9	BOLT, CRIMPER(5/16x1.00)	41
1	1	1	-	A	23241-6	BALL, STEEL	40
1	1	1	-	A	690170-1	SPRING, COMPRESSION	39
1	1	1	-	C	690142-1	DISC, INSULATION	38
1	1	1	-	D	354777-1	WIRE DISC, PLASTIC	37
1	1	1	-	A	22480-5	WASHER, SPRING	36
1	1	1	-	B	690212-1	POST, RAM	35
1	1	1	-	B	690786-3	SUPPORT, TERMINAL	34
1	1	1	-	D	455675-1	PLATE, BASE	33
1	1	1	-	A	690432-3	SCREW, ADJUSTMENT	32
							31
1	1	1	-	B	455689-1	BLOCK, STRIP GUIDE ADJ	30
1	1	1	-	C	3-458144-3	PLATE, STRIP GUIDE	29
1	1	1	-	C	455888-7	SPACER, FRONT SHEAR DEP	28
2	2	2	-	A	1-22284-0	SPRING, DRAG	27
1	1	1	-	B	240793-1	LEVER, DRAG RELEASE	26
1	1	1	-	B	240792-1	DRAG, TERMINAL	25
1	1	1	-	D	6-690504-1	GUIDE, STRIP (REAR)	24
1	1	1	-	A	690438-1	GUIDE, STRIP (FRONT)	23
-	-	1	-	B	690472-2	STRIPPER	22
							21
1	1	-	-	A	679218-1	STRIPPER WIRE STOP ASSY	20
1	1	-	-	B	458949-1	STRIPPER	19
1	1	1	-	B	460801-6	HOLDER, TERMINAL	18
							17
1	1	1	-	B	318563-1	GUARD, CHIP, FRONT	16
							15
							14
							13
1	1	1	-	A	5-22280-0	SPRING, SHEAR	12
1	1	1	-	B	690461-2	STOP, SHEAR	11
1	1	1	-	C	1-690459-0	HOLDER, SHEAR (FRONT)	10
1	1	1	-	C	454276-9	SHEAR, FLOAT (FRONT)	9
1	1	1	-	C	1-662520-0	ANVIL	8
1	1	1	-	C	2-240641-5	SPACER, DEPRESSOR (REAR)	7
							6
1	1	1	-	C	2-455889-1	DEPRESSOR, SHEAR (FRONT)	5
1	1	1	-	B	1-238011-0	SPACER, BLOCK CRIMPER	4
1	1	1	-	C	9-683453-0	CRIMPER, INSULATION	3
1	1	1	-	C	455888-7	SPACER, CRIMPER	2
1	1	1	-	C	5-458141-3	CRIMPER, WIRE	1

QTY REQD PER ASSY — PARTS LIST

REVISION OF EACH ASSY NO (WHEN BLANK, USE DWG REVISION)

1. RECOMMENDED SPARE PARTS.
2. GREASE LIGHTLY.
3. GUARD MUST BE IN PLACE WHEN OPERATING APPLICATOR IN A BENCH MACHINE.
4. SEE DRAWING FOR COMPONENTS

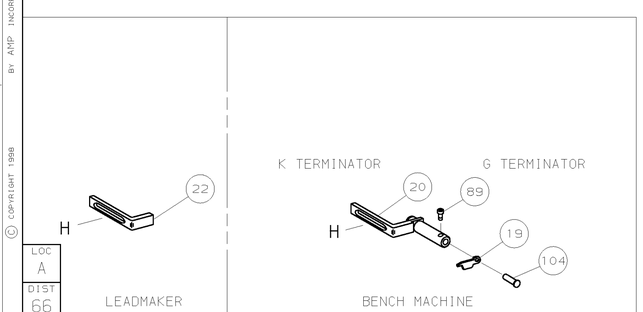

P	F	LTR	REVISION RECORD	APP	DATE
		E	ECN 0150-0221-04	TE	2-04
		D	ECN 0150-1262-03	TE	11-03
		C	0150-0058-00	TE	JAN00
		B	0150-8378-98	TB	3-98
		A	RELEASED	CE	9/97

DIMENSIONS IN INCHES. DO NOT SCALE PRINT.
TOLERANCES UNLESS OTHERWISE SPECIFIED:
2 PLC DEC ±.25
3 PLC DEC ±-
4 PLC DEC ±-
ANGLES ±-
SURF TEXTURE: √
REMOVE BURRS, BREAK SHARP EDGES R.015 MAX

MATL - HT TR - FIN -

DR L.COLLINS 16APR97 APP 16APR97 T.ELBIN
CHK 16APR97 C. ERISMAN REL -

AMP Incorporated Harrisburg, PA 17105-3608

NAME SIDE FEED HDM APPLICATOR — MACHINE REF MINI APPL

SCALE - D DWG NO 680449 SHEET 1 OF 1 REV E

CAGE CODE 00779 — CUSTOMER AND ASSEMBLY DRAWING — RESTRICTED TO -

LOC A DIST 66

THIS DRAWING IS UNPUBLISHED. © COPYRIGHT 1998 BY AMP INCORPORATED. ALL INTERNATIONAL RIGHTS RESERVED.
RELEASED FOR PUBLICATION MAR 23,1998
THIS DRAWING IS A CONTROLLED DOCUMENT