PACKAGE OUTLINE

BRIDGE

GBL

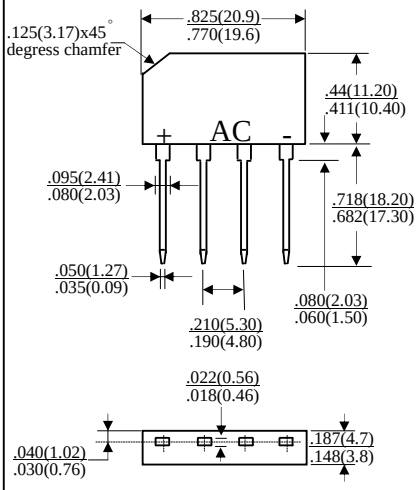

Dimensions in inches and (millimeters)

KBPM

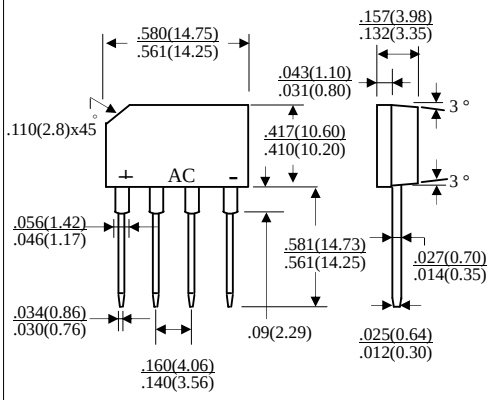

Dimensions in inches and (millimeters)

KBP

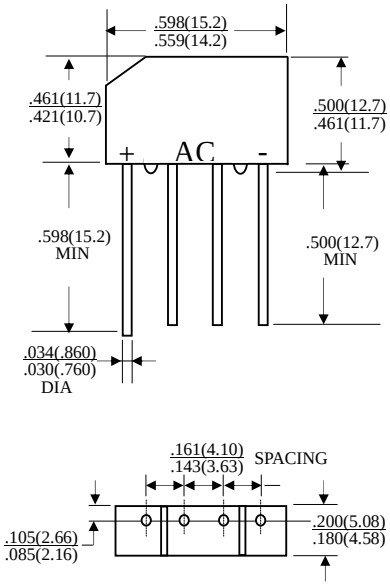

Dimensions in inches and (millimeters)

KBL

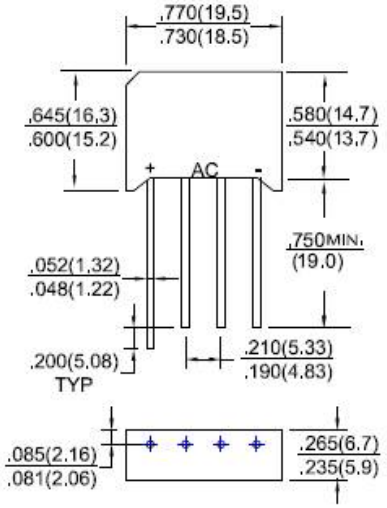

Dimensions in inches and (millimeters)