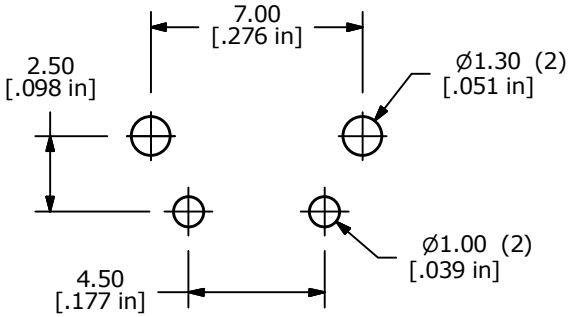

PC MOUNTING

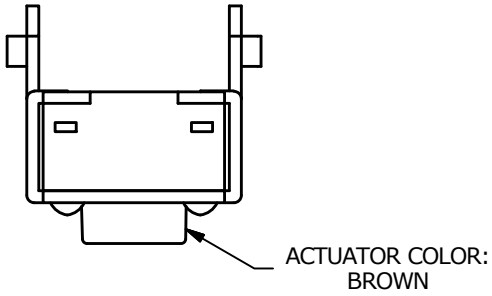

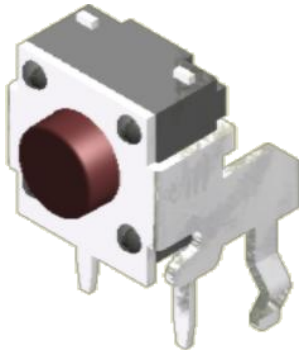

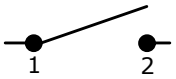

CIRCUIT: SPST

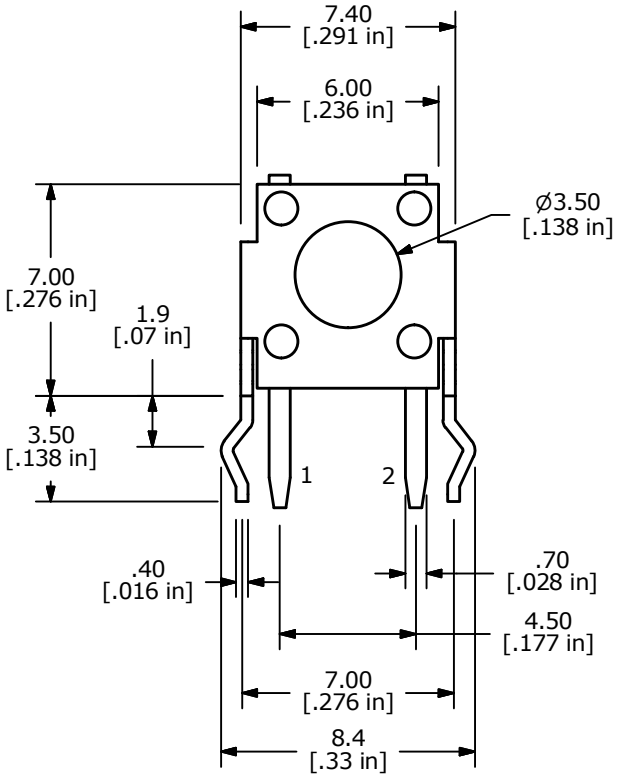

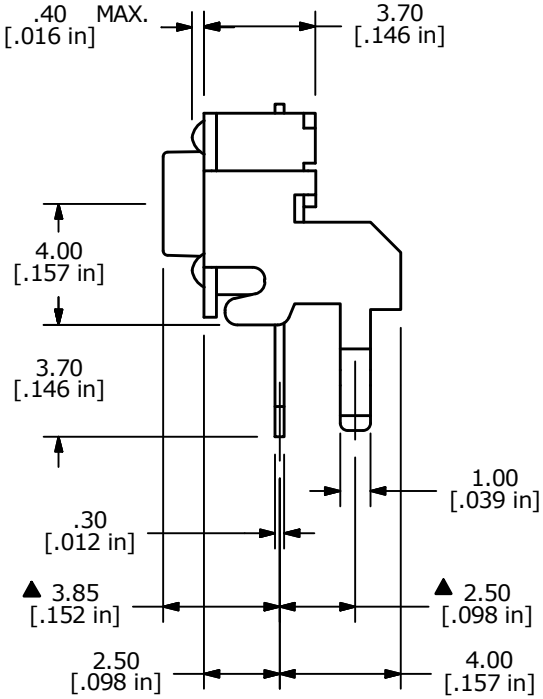

NOTES:
1. ALL DIMENSIONS IN MM
2. GENERAL TOLERANCE: X.X = ±0.4
   X.XX = ±0.25
3. TERM. NOS. FOR REFERENCE ONLY.
▲ 4. CONTACT MATERIAL: SILVER W/ STAINLESS STEEL DOME
▲ 5. RATING: 12VDC, 50mA
▲ 6. OPERATING FORCE: 100 ± 50 gms
7. TRAVEL: 0.25 +0.2/-0.1 mm
8. CONTACT RESISTANCE: 100 MILLI OHMS MAX. (INITIAL)
9. MECHANICAL/ELECTRICAL LIFE 500,000 CYCLES MIN.
10. ▲ DENOTES CRITICAL PARAMETER
11. 2002/95/EC (ROHS) COMPLIANT
▲ 12. PACKAGING: 1,000 PIECES PER REEL

REV	PCR NO	DESCRIPTION	DATE	BY
E	22684	correct Actuator color to Brown	1/20/17	MW
D	22178	UPDATE PRINT TO NEW FORMAT	3/3/16	MW

THE INFORMATION CONTAINED IN THIS DOCUMENT IS PROPRIETARY TO E-SWITCH AND IS NOT TO BE COPIED OR TRANSFERRED

E-SWITCH®

TITLE TL1105VF100Q

SCALE	DATE	DR	DWG	REV
4:1	10/9/2009	MM	P020304	E