MATERIAL NO.	ENGINEERING NO.	LENGTH
1303030001	130303-0001	39.37 +2.19 - 0 (1M +55.6 - 0)
1303030002	130303-0002	78.74 +3.50 - 0 (2M +88.9 - 0)

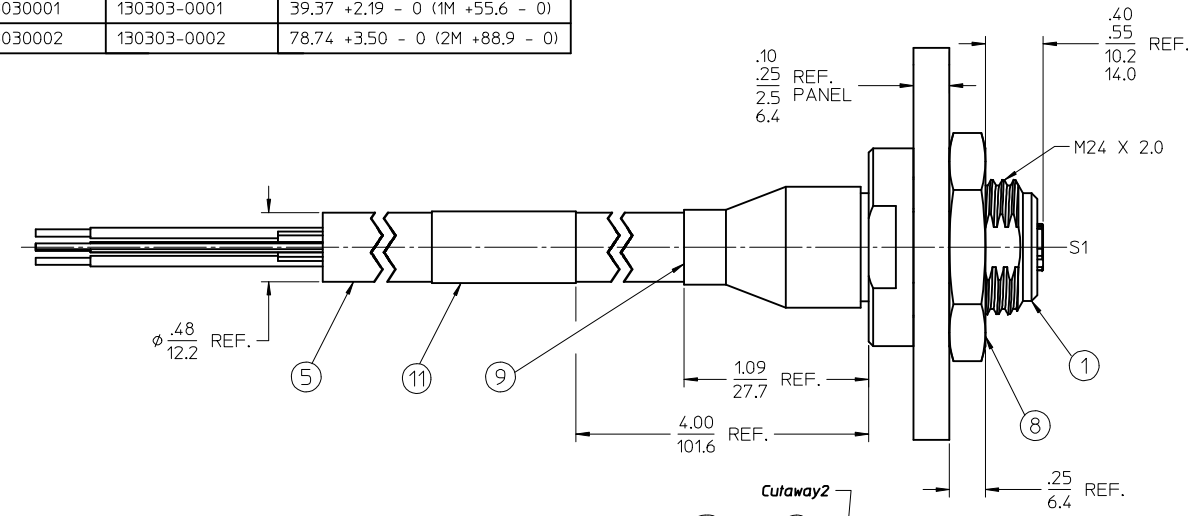

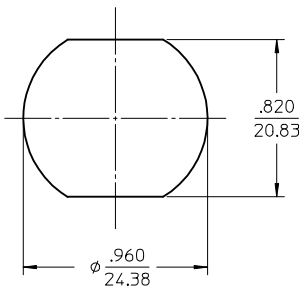

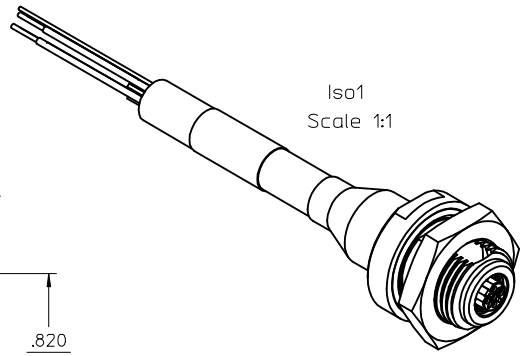

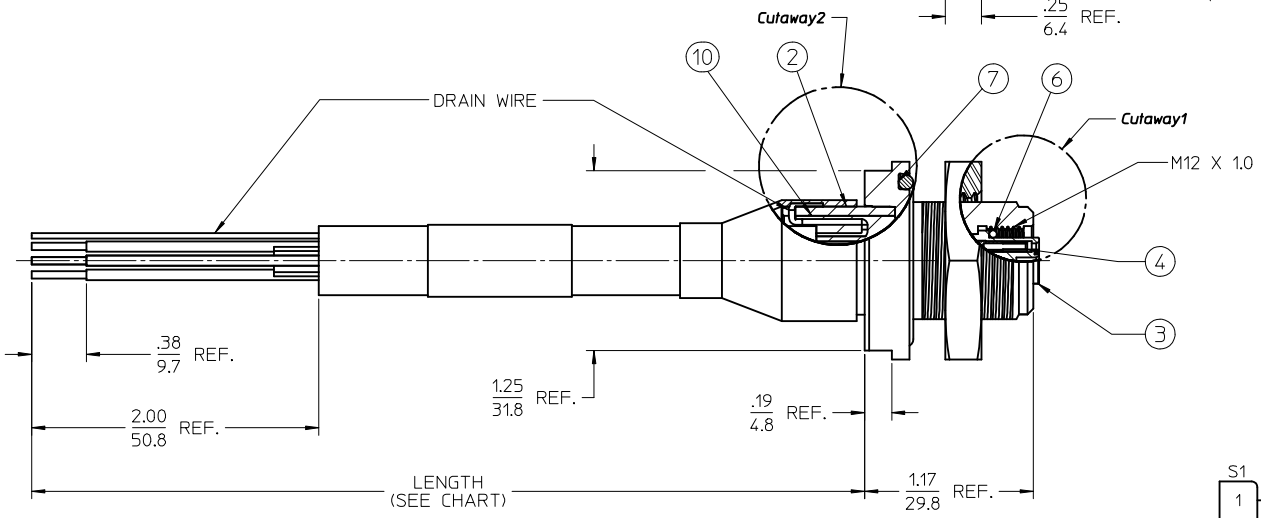

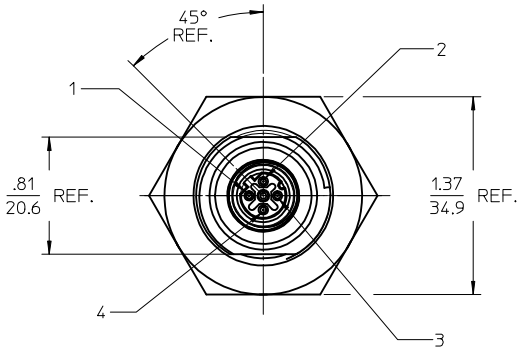

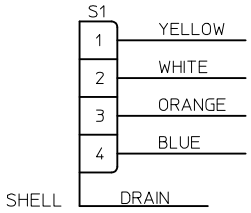

WIRING DIAGRAM

NOTES:
1. MATERIALS: SEE TABLE
2. FINISHES: SEE TABLE
3. ELECTRICAL RATINGS:
   VOLTAGE 125V
   CURRENT: 1.5 AMPS
4. PANEL NUT TORQUE: 12 FT.LBS.
5. MATES WITH: MICRO-CHANGE D-CODE-MALE
6. ASSEMBLY IS TO BE RoHS COMPLIANT

ITEM	QTY.	DESCRIPTION	MATERIAL	FINISH
11	1	WRAP LABEL	VINYL	BLACK/YELLOW
10	1	POTTING MATERIAL	POLYURETHANE	BLUE
9	1	GLENAIR SHRINK SLEEVE (ADHESIVE LINED)	POLYOLEFIN	BLACK
8	1	PANEL NUT, M24 x 2.0	STAINLESS STEEL	PASSIVATED
7	1	O-RING, PANEL SEAL	VITON	RED
6	1	O-RING, MATING SEAL	VITON	RED
5	1	CABLE, 18 AWG,4/C, SHIELDED	XLE INSULATION	SEE WIRE DIAGRAM
4	4	CONTACT SOCKET, 18 AWG	Cu ALLOY	GOLD PLATED
3	1	INSULATOR, 4/C, D-CODE	NYLON	BLACK
2	1	RECEPTACLE SLEEVE	STAINLESS STEEL	PASSIVATED
1	1	RECEPTACLE SHELL	STAINLESS STEEL	PASSIVATED

REVISED NOTE
EC NO: IPG2016-0711 2015/11/10
DRWN:GGUSTAFSON 2015/12/22
CH'KD:VOU 2015/12/02
APPR:BWOODMAN
DESCRIPTION
REV E

QUALITY SYMBOLS
▼=0
▽=0

GENERAL TOLERANCES (UNLESS SPECIFIED)

	mm	INCH
4 PLACES	± ---	± ---
3 PLACES	± ---	± ---
2 PLACES	± ---	± .010
1 PLACE	± 0.3	± ---
ANGULAR ± 2 °		

DRAFT WHERE APPLICABLE MUST REMAIN WITHIN DIMENSIONS

DIMENSION STYLE: IN/MM
SCALE: 1.5:1
DESIGN UNITS: INCH
THIRD ANGLE PROJECTION

DRAWN BY	R.STONE	DATE 2010/02/03
CHECKED BY	B.RUPERT	DATE 2010/02/08
APPROVED BY	J.MURPHY	DATE 2010/02/12
MATERIAL NO.	SEE CHART	

TITLE: MIC RECEPTACLE ASSEMBLY HDEX, FEM, D-CODE, M12 18 AWG, MAX LOAD FRONT

MOLEX INCORPORATED

DOCUMENT NO. SD-130303-001
SHEET NO. 1 OF 1
SIZE C

THIS DRAWING CONTAINS INFORMATION THAT IS PROPRIETARY TO MOLEX INCORPORATED AND SHOULD NOT BE USED WITHOUT WRITTEN PERMISSION