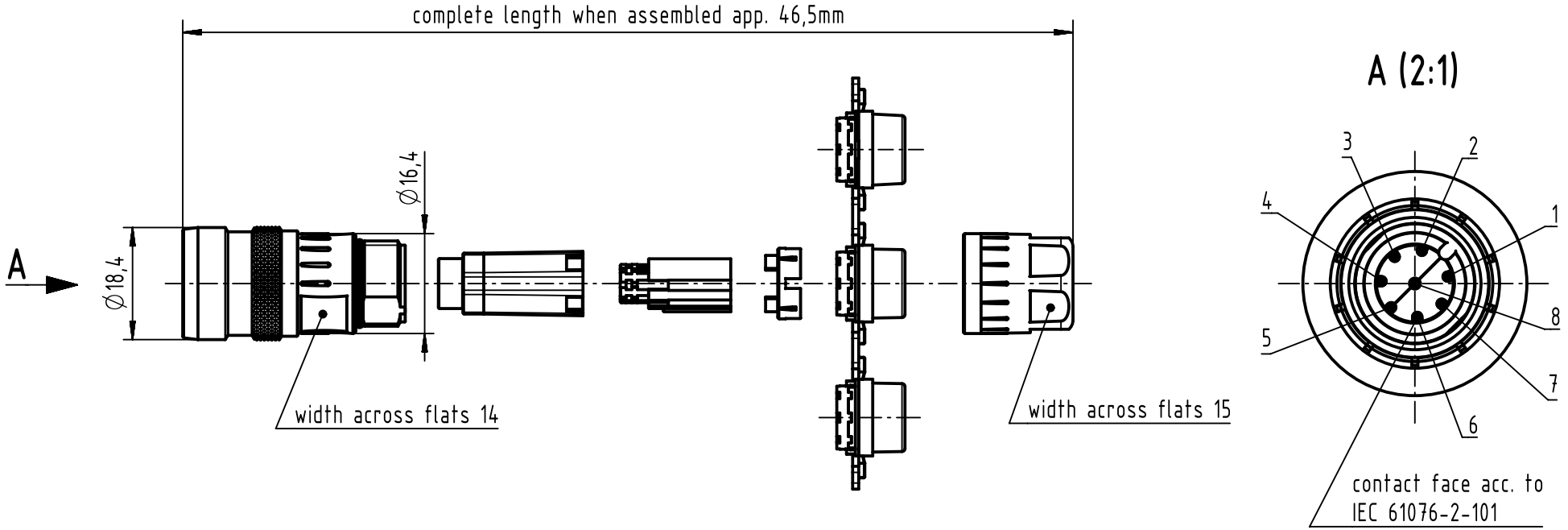

order contacts separately

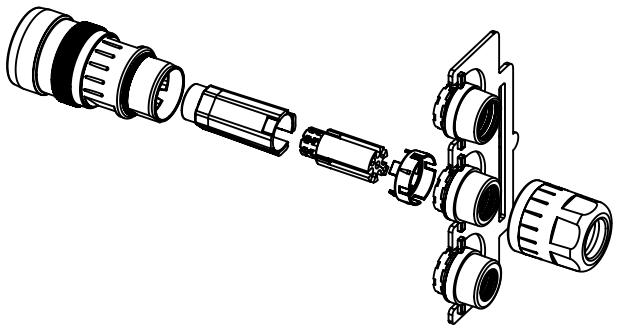

5,7-8,8mm	AWG 26-22	21 01 100 9020
cable Ø	wire gauge	part number

All Dimensions in mm
Original Size DIN A4

Scale	Free size tol.	Ref.
1:1		Sub.

All rights reserved

Department EC PD - DE

HARTING Electronics GmbH
D-32339 Espelkamp

Created by	Inspected by	Standardisation	Date	State
HASSE	FRIESENH	HOFFMANN	2015-06-29	Final Release

Title: M12 PushPull 8-pole A-coded male

Doc-Key / ECM-Nr.: 100600629/UGD/000/B 500000090719

Type	Number	Rev.	Page
TB	21038211830	B	1/1

A4