THIS DRAWING IS UNPUBLISHED. RELEASED FOR PUBLICATION 20
© COPYRIGHT 20 BY TYCO ELECTRONICS CORPORATION. ALL RIGHTS RESERVED.

PART NUMBER	REV	TERMINATOR	FEED TYPE	DESCRIPTION
1529202-1	B	BENCH & LEADMAKER	MECH POST FEED	HDI APPLICATOR
7-1529202-1	B	BENCH & LEADMAKER	MECH POST FEED	-1 AND SPARE PARTS
7-1529202-7	A	-	-	SPARE PARTS KIT

SET UP GAGE 458638-3

LOC	DIST
A	66

REVISIONS

P	LTR	DESCRIPTION	DATE	DWN	APVD
	A	SEE ECO-06-029524	18DEC2006	DP	MC
	B	ECR-08-018098	18JUL2008	MY	TE

CRIMP DATA		TE TERMINAL	TE CRIMP SPECS
TERMINAL NAME: .187 SERIES POSITIVE LOCK MK II			
CRIMP	SIZE	TYPE	RANGE
WIRE	2.03 [.080 IN]	F	0.75-1.50mm² △6
INSUL	3.94 [.155 IN]	F	1.90-3.40 [.075-.134 IN]
WIRE STRIP LENGTH 5.00 [.197 IN]			APPL INSTRUCTIONS 408-8323 & 408-8490
TERMINAL 114-18022 -			FEED 22.10 [.870 IN]
APPL SPEC - -			

TERMINALS APPLIED

173691	-	-	-
170325	-	-	-
-	-	-	-
-	-	-	-
-	-	-	-

WIRE SIZE	CRIMP HEIGHT * △5	REF SETTING *
1.50mm²	1.63 ±0.05 [.064 ±.002 IN]	A9
1.00mm²	1.44 ±0.05 [.057 ±.002 IN]	C2
0.75mm²	1.35 ±0.05 [.053 ±.002 IN]	C9
-	-	-
-	-	-
-	-	-
-	-	-
-	-	-
-	-	-
-	-	-
-	-	-

△1 RECOMMENDED SPARE PARTS

2. GREASE RAM, CAM, CAM FOLLOWER AND FEED ROD LIGHTLY.

△3 CERTAIN TERMINALS REQUIRE LUBRICATION. REFER TO THE APPLICATOR INSTRUCTION SHEET FOR MORE INFORMATION.

4. LUBRICATE DAILY PER THE APPLICATOR INSTRUCTION SHEET SUPPLIED WITH THE APPLICATOR.

△5 CRIMP DATA QUOTED IS SPECIFIC TO THE GERMAN MARKET.

△6 WIRE RANGE SHOWN IS THAT OF THE APPLICATOR.

△7 ITEM 56, CUT TO LENGTH AT ASSEMBLY.

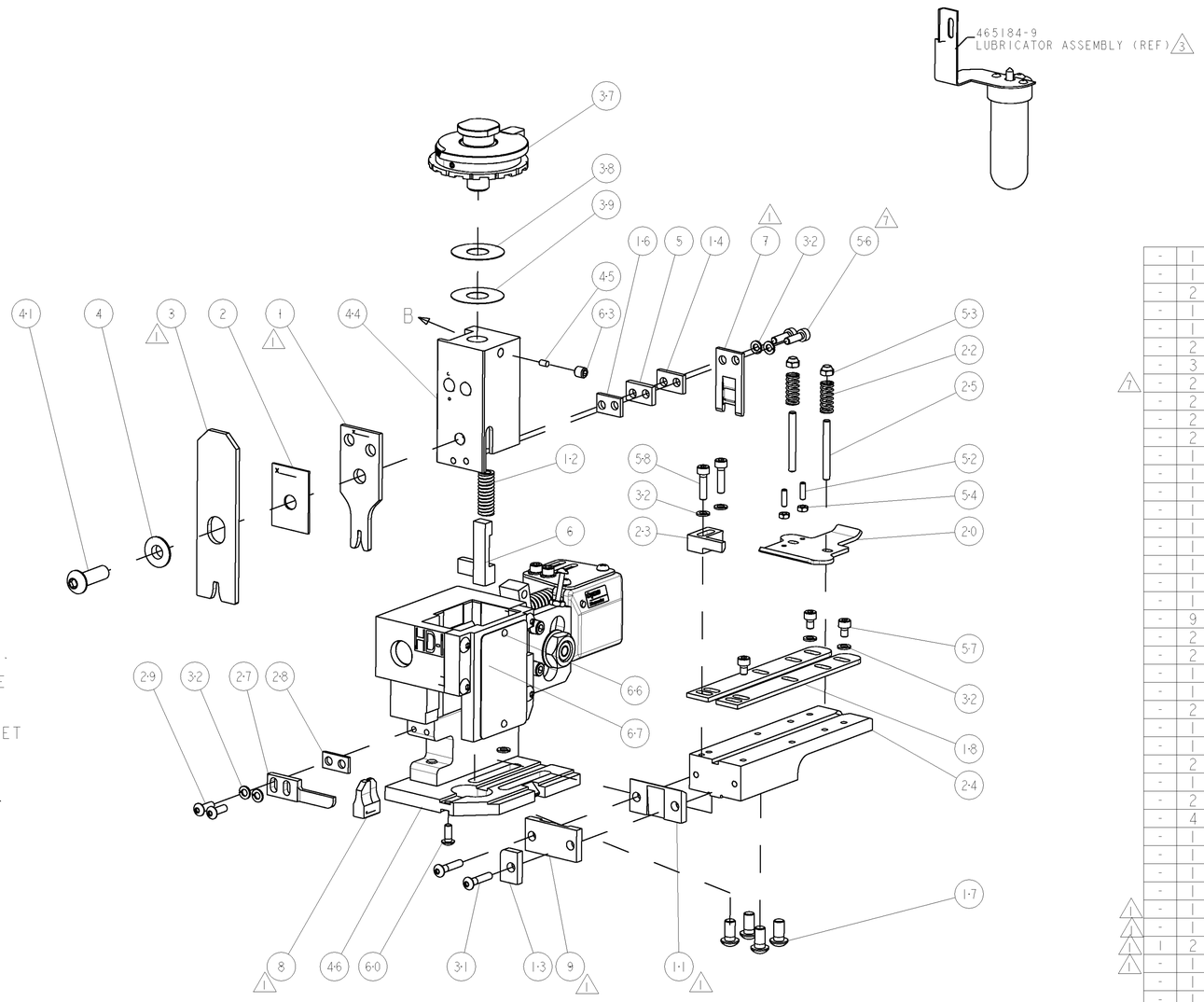

-	1	1	1338705-4	DOCUMENTATION PACKAGE	71
-	1	1	461264-5	PLATE, IDENTIFICATION	67
-	2	2	21017-2	SCREW, DRIVE	66
-	1	1	3-18031-0	SCR, SET, CUP POINT M6 X 6.0	63
-	1	1	18024-7	SCR, BTN SKT HD CAP (M4 X 10.0)	60
-	2	2	1-18023-3	SCR, SKT HD CAP M4 X 16.0	58
-	3	3	18023-9	SCR, SKT HD CAP M4 X 6.0	57
△7 -	2	2	9-18023-6	SCR, SKT HD CAP M4 X 14.0	56
-	2	2	18029-1	NUT, HEX, REG M3	54
-	2	2	986965-1	NUT, LOCK, HEX, TORQUE (M4)	53
-	2	2	2-18032-2	SCR, SET, FLT POINT M3 X 10.0	52
-	1	1	18024-3	SCR, BTN SKT HD CAP (M3 X 10.0)	49
-	1	1	1338676-1	CAM, UNIVERSAL POST-FEED	47
-	1	1	1338662-5	SUB ASSY, APPLICATOR FRAME	46
-	1	1	690191-1	PLUG,NYLON	45
-	1	1	1320998-1	RAM	44
-	1	1	2-18024-6	SCR, BTN SKT HD CAP (M8 X 25.0)	41
-	1	1	690125-1	SHIM SUB-ASSY	39
-	1	1	1-469367-0	SHIM	38
-	1	1	879103-2	FINE ADJUST HEAD ASSEMBLY	37
-	9	9	18025-2	WASHER, SPRG LOCK, REG M4	32
-	2	2	1-18024-0	SCR, BTN SKT HD CAP (M4 X 20.0)	31
-	2	2	18024-8	SCR, BTN SKT HD CAP (M4 X 12.0)	29
-	1	1	3-690451-2	SPACER, STRIPPER	28
-	1	1	240639-1	STRIPPER (MACHINING)	27
-	2	2	1320906-1	STUD, THREADED	25
-	1	1	1320995-7	PLATE, STRIP GUIDE	24
-	1	1	240825-2	PLATE, STRIP HOLD DOWN	23
-	2	2	4-22281-1	SPRING, DRAG	22
-	1	1	1338665-1	DRAG	20
-	2	2	1338663-5	GUIDE, LOWER STRIP	18
-	4	4	1-18024-8	SCR, BTN SKT HD CAP (M6 X 12.0)	17
-	1	1	1338708-1	SPACER, SLUG BLADE	16
-	1	1	240641-7	SPACER	14
-	1	1	2-690481-0	SPACER, HOLD DOWN	13
-	1	1	23846-1	SPRING, DIE	12
△1 -	1	1	240833-7	PLATE, REAR SHEAR	11
△1 -	1	1	3-690482-2	PLATE, FRONT SHEAR	9
△1 1	2	1	3-1333216-1	ANVIL, COMBINATION	8
△1 -	1	1	1-690474-7	BLADE, SLUG	7
-	1	1	7-455892-8	HOLD DOWN, TERMINAL	6
-	1	1	4-240641-6	SPACER	5
-	1	1	238009-1	BLOCK, FL CRIMPER SPACER	4
△1 1	2	1	1-456134-2	CRIMPER, INSULATION F PREMIUM	3
-	1	1	455888-9	SPACER, CRIMPER	2
△1 1	2	1	1-456405-5	CRIMPER, WIRE PREMIUM	1
-77	-71	-1	PART NO	DESCRIPTION	ITEM NO

VIEW B ROTATED 180°

POST-FEED 40mm STROKE

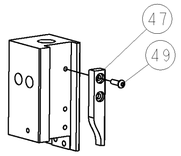

POST-FEED 30mm STROKE

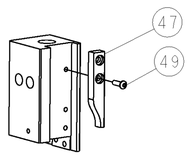

* WARNING

ON INSTALLATION, SET WIRE DISC TO LARGEST WIRE SIZE SETTING. USE OF SETTINGS BELOW MIN. REQUIRED CRIMP HEIGHT SETTING WILL CAUSE DAMAGE TO CRIMP TOOLING.

THIS DRAWING IS A CONTROLLED DOCUMENT FOR TYCO ELECTRONICS CORPORATION. IT IS SUBJECT TO CHANGE WITHOUT NOTICE. ANY QUESTIONS REGARDING THIS DRAWING SHOULD BE CONTACTED FOR THE LATEST REVISION.

DIMENSIONS: INCHES

TOLERANCES UNLESS OTHERWISE SPECIFIED:
0 PLC ±-
1 PLC ±0.1
2 PLC ±0.01
3 PLC ±0.001
4 PLC ±0.0001
ANGLES ±-

MATERIAL - -
FINISH - -

DWN L. LOFTHOUSE 26OCT2006
CHK -
APVD M.CLIFFORD 26OCT2006
PRODUCT SPEC -
APPLICATION SPEC -
WEIGHT -

tyco Electronics
Tyco Electronics
Harrisburg, PA 17105-3608

NAME FINE ADJUST END FEED HDI APPLICATOR -

SIZE	CAGE CODE	DRAWING NO	RESTRICTED TO
A1	00779	C-1529202	-

CUSTOMER DRAWING SCALE 3:5 SHEET 1 OF 1 REV B

CUSTOMER VIEWABLE ASSEMBLY

AMP 4805 REV 31MAR2000

Pro/ENGINEER DRAWING