P/N	Q'TY/REEL	REEL/BOX	SPQ	MOQ
1054550001	1300 PCS	6	1300 PCS	7800 PCS
1054550101				
1054550201				
1054550301				

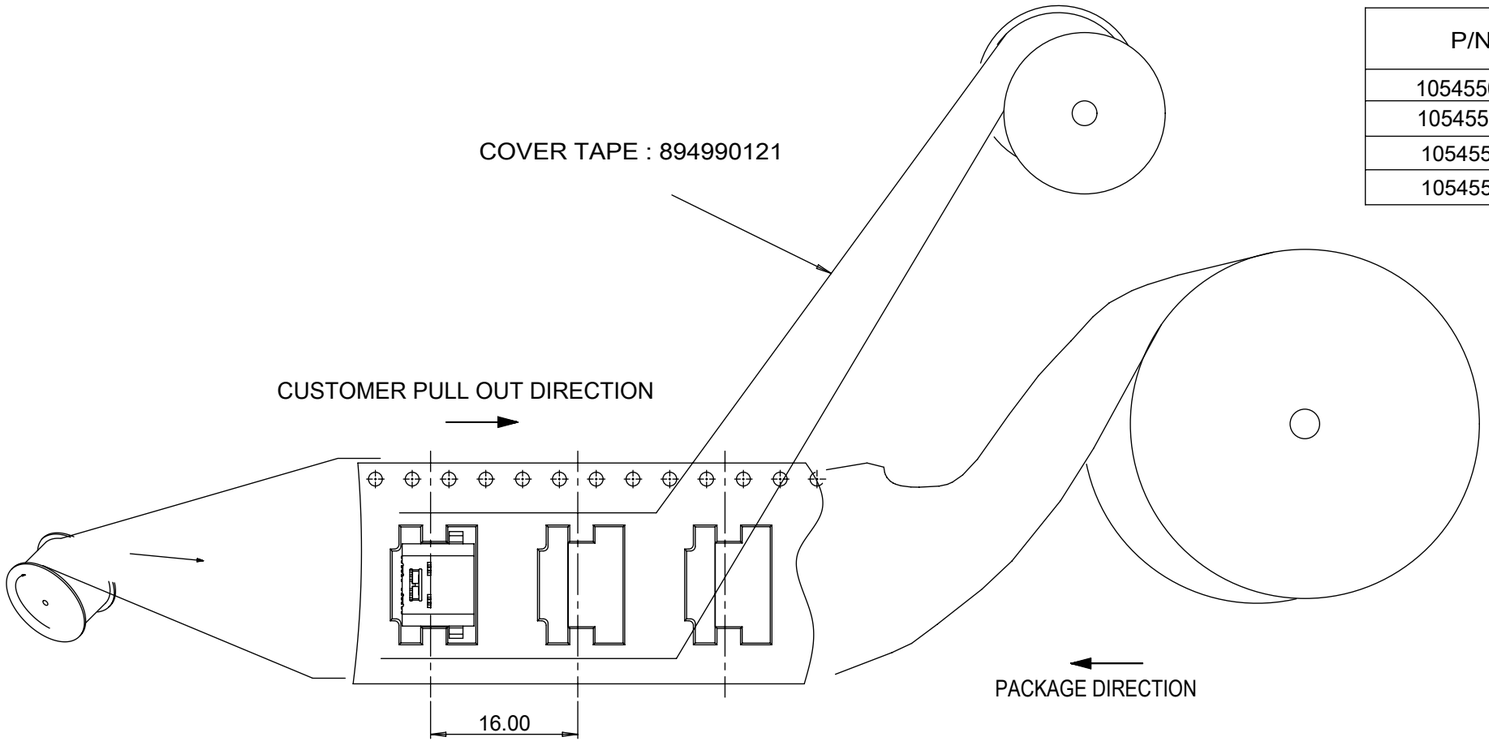

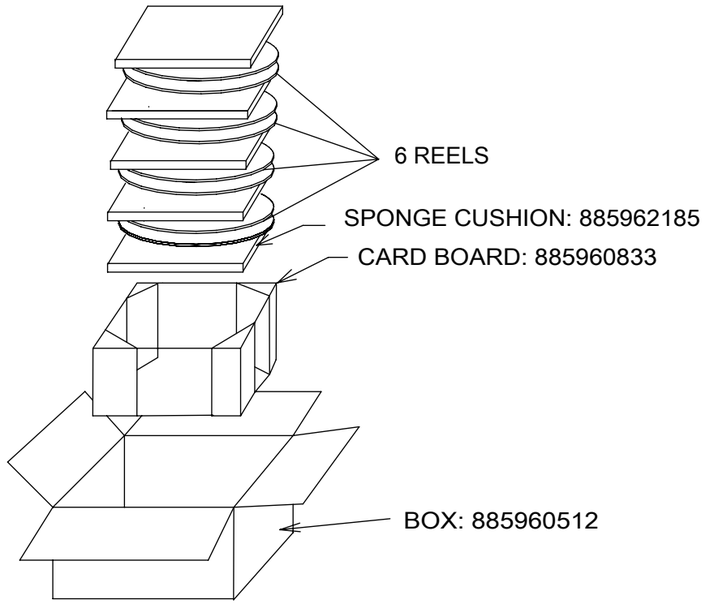

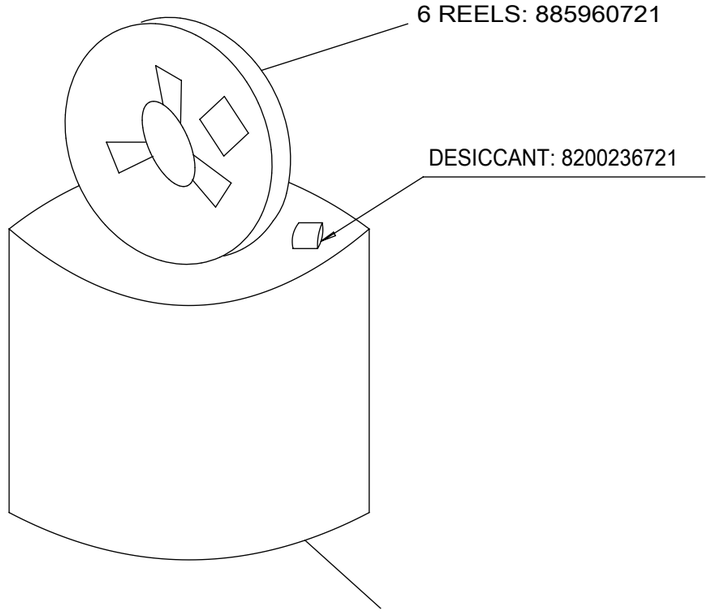

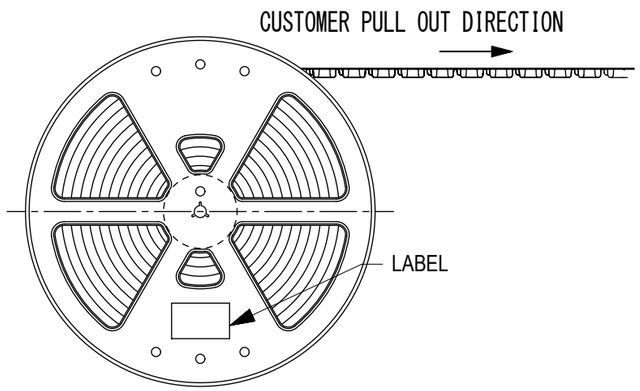

NOTES:

1. PACKING PER 15" REEL, 24mm CARRIER TAPE,
2. THE PEELING FORCE OF CARRIER TAPE :

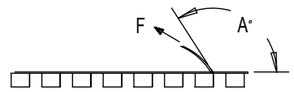

PEELING SPEED 300MM/MIN

A	165°~180°
F	0.1N~1.3N

3. USER DIRECTION OF FEED:

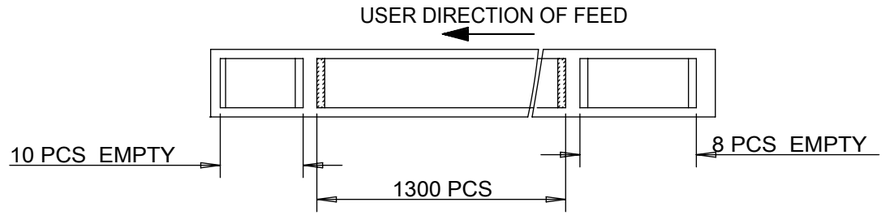

QUALITY SYMBOLS	
FA	= 0
FC	= 0
FP	= 0
▼	= 0
C	= 0
☒	= 0
■	= 0
V	= 0

THIS DRAWING CONTAINS INFORMATION THAT IS PROPRIETARY TO MOLEX ELECTRONIC TECHNOLOGIES, LLC AND SHOULD NOT BE USED WITHOUT WRITTEN PERMISSION

EC NO:	115587	2016/11/22
DRWN:	RZHANG	
CHK'D:		
APPR:	AYIN	2017/04/24
REV	A	

GENERAL TOLERANCES (UNLESS SPECIFIED)

ANGULAR TOL ±	°
4 PLACES	±
3 PLACES	±
2 PLACES	±
1 PLACE	±
0 PLACES	±

DRAFT WHERE APPLICABLE MUST REMAIN WITHIN DIMENSIONS

DIMENSION UNITS	MM
SCALE	1:1
DRWN BY	RZHANG
DATE	2016/03/31
CHK'D BY	RZHANG
DATE	2016/03/31
APPR BY	AYIN
DATE	2016/03/31
DRAWING SIZE	A3
THIRD ANGLE PROJECTION	

molex®

PACKAGE FOR USB C TYPE

PACKAGING DESIGN DRAWING

SERIES	MATERIAL NUMBER	CUSTOMER
105455		GENERAL MARKET

DOCUMENT NUMBER	DOC TYPE	DOC PART	SHEET NUMBER
PK-105455-001	PDD	000	1 OF 1

RELEASE STATUS		RELEASE DATE	

FORMAT: master-tb-prod-A3
REVISION: G
DATE: 2015/12/14