THIS DRAWING IS UNPUBLISHED.
VERTRAULICHE UNVEROEFFENTLICHTE ZEICHNUNG
© COPYRIGHT 1998 BY AMP INCORPORATED.
RELEASED FOR PUBLICATION ,1999.
FREI FUER VEROEFFENTLICHUNG
ALL RIGHTS RESERVED.
ALLE RECHTE VORBEHALTEN

MATED WITH:
PASSEND ZU:
HA 16

LOC	DIST
AI	–

PROJEKT NR.: –

REVISIONS
AENDERUNGEN

P	LTR	DESCRIPTION BESCHREIBUNG	DATE	DWN	APVD
	D3	ECR-15-004594	26MAR15	RK	MKO

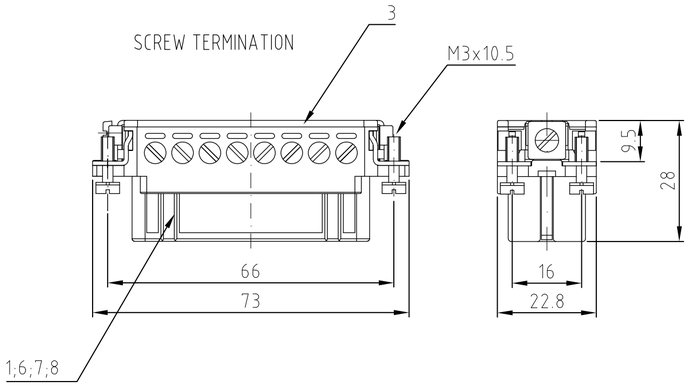

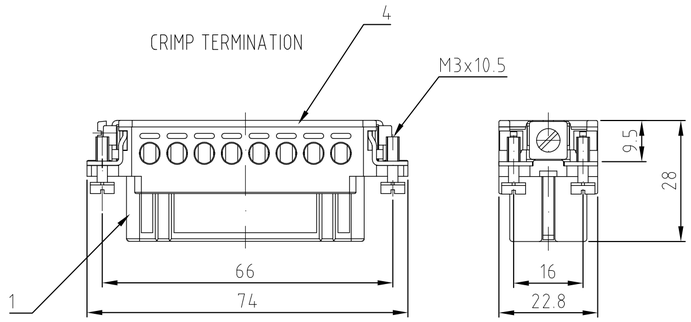

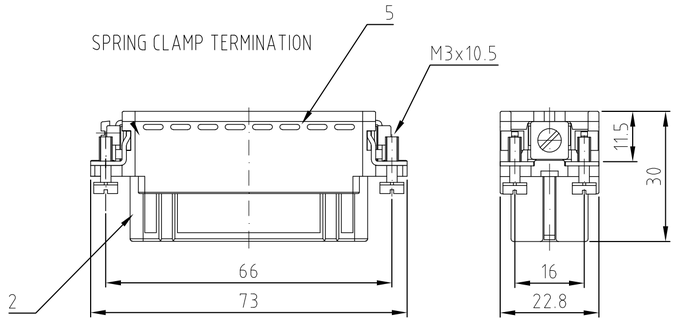

Contact arrangement / view from termination side

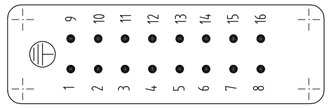

Contact arrangement / view from termination side

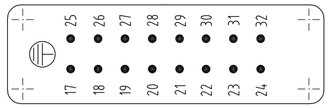

Contact arrangement / view from termination side

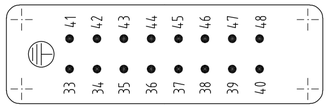

Contact arrangement / view from termination side

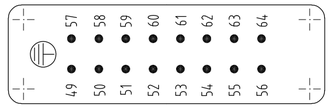

Panel cut-out for contact insert when used without housing

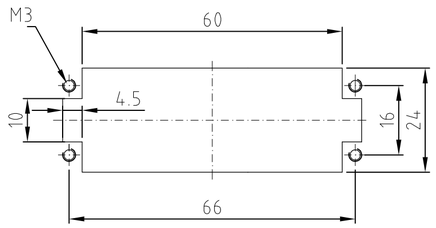

Assembling instruction

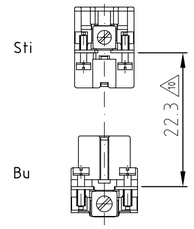

⚠10 DISTANCE FOR SAFETY CONTACT MARKING MAX. 24 mm

NOTES:

1 SUITABLE CRIMP CONTACTS: SERIES HE/HA
OUTER DIMENSIONS OF INSULATION: MAX. Ø3,2 MM

2 SUITABLE HOOD SIZE 5; 7; 9; 11: SERIES HA; HD
SUITABLE INSERTION AND EXTRACTION TOOL:
SCREWDRIVER 0,5x3 DIN 5264

3 Strip lenght: Screw conection 10mm
Spring clamp conection 10mm Crimp conection 7.5mm

4 STANDARDS:
DIN EN 61984; DIN EN 60664-1

⚠5 PACKAGING:
5 SETS IN A CARTON, PRE-MOUNTED

⚠6 SPECIAL PACKAGING: Krauss-Maffei
PACKAGING UNIT: 300 PIECES

⚠7 SPECIAL PACKAGING: Krauss-Maffei
PACKAGING UNIT: 150 PIECES

⚠8 SPECIAL PACKAGING: AIS
PACKAGING UNIT: 250 PIECES

⚠9 SPECIAL PACKAGING: WIELAND
PACKAGING UNIT: 100 PIECES

⚠9	⚠8	⚠7	⚠6	⚠5	⚠5	⚠5	⚠5	⚠5	⚠5	⚠5	⚠5	⚠5	⚠5	⚠5	⚠5	⚠5	⚠5	⚠5	⚠5					
HA.16.Bu.S.B1-16.WIE	HA.16.Bu.S.B1-16.AIS	HA.16.Bu.S.B17-32.KM	HA.16.Bu.S.B1-16.KM	HA.16.Bu.S-VA.B 1-16	HA.16.Bu.S-VA.B 17-32	HA.16.Bu.S-AU.B 1-16	HA.16.Bu.C.B 49-64	HA.16.Bu.S.B 49-64	HA.16.Bu.SC.B 49-64	HA.16.Bu.SC.B 33-48	HA.16.Bu.S.B 33-48	HA.16.Bu.C.B 33-48	HA.16.Bu.S.B 17-32	HA.16.Bu.SC.B 17-32	HA.16.Bu.C.B 17-32	HA.16.Bu.SC.B 1-16	HA.16.Bu.C.B 1-16	HA.16.Bu.S.B 1-16	ORDERING TEXT / BESTELLTEXT	DESCRIPTION / BENENNUNG	MATERIAL	COLOR / FARBE	ITEM NO. POS.	REMARKS / BEMERKUNGEN
				1															Socket insert screw	PBT	light beige	8	with stainless steel-fixing screw
					1														Socket insert screw	PBT	light beige	7	with stainless steel-fixing screw
						1													Socket insert screw	PBT	light beige	6	with AU contact
									1	1				1		1			Cover	PBT	light beige	5	
							1					1			1		1		Cover	PBT	light beige	4	
1	1	1	1	1	1	1		1			1		1					1	Cover	PBT	light beige	3	
									1	1				1		1			Socket insert spring clamp	PBT	light beige	2	
1	1	1	1				1	1			1	1	1		1		1	1	Socket insert crimp screw	PBT	light beige	1	
1-3	1-2	1-0	0-7	0-4	0-6	0-5	2-9	1-9	7-9	7-8	1-8	2-8	1-7	7-7	2-7	7-1	2-3	1-1					

THIS DRAWING IS A CONTROLLED DOCUMENT FOR AMP INCORPORATED.
IT IS SUBJECT TO CHANGE AND THE CONTROLLING ENGINEERING ORGANIZATION SHOULD BE CONTACTED FOR THE LATEST REVISION.
DIESES ZEICHNUNGSDOKUMENT WIRD DURCH AMP INCORPORATED KONTROLLIERT. AENDERUNGEN, DIE DEM TECHNISCHEN FORTSCHRITT DIENEN, SIND VORBEHALTEN. DEN JEWEILS LETZTGUELTIGEN AENDERUNGSSTAND ERFAHREN SIE AUF ANFRAGE.

DIMENSIONS: DIMENSIONEN: mm

TOLERANCES UNLESS OTHERWISE SPECIFIED: ALLGEMEINTOLERANZEN
n. ISO 8015
n. ISO 2768 – mH –E
n. DIN 16901 – 140
0 PLC #
1 PLC #
2 PLC #
3 PLC #
ANGLES /WINKEL #

MATERIAL

FINISH /OBERFLAECHE/FARBE

DWN Schneider 09.02.2000
CHK Schweiger 09.02.2000
APVD –
PRODUCT SPEC PRODUKTSPEZ. 108-74007
APPLICATION SPEC VERABEITUNGSSPEZ. 114-74009
WEIGHT GEWICHT –

TE Connectivity

NAME
Female insert
HA.16.BU.C/S

SIZE	CAGE CODE	DRAWING NO ZEICHNUNGS-NR.	RESTRICTED TO NUR FUER
A2	00779	C- 1103417	–

CUSTOMER DRAWING /KUNDENZEICHNUNG
SCALE MASSSTAB 1:1 SHEET BLATT 1 OF VON 1 REV D3